America's Largest Chain of Barbecue Stores

Turbo STS Instruction Manual

3 Burner Standard	**C3BSSTP/N**
4 Burner Standard	**C4BSSTP/N**
4 Burner w/ Rear Rotisserie Burner	**C4BSSTRP/N**

Note: We highly recommend you always cover this barbecue when it is not in use which will prolong the life of the barbecue and protect it from the elements.

FOR YOUR SAFETY, IF YOU SMELL GAS :

1. Shut off gas to the appliance.
2. Extinguish any open flame.
3. Open lid.
4. If odor continues, immediately call your gas supplier.
5. Do not store or use gasoline or other flammable vapors and liquids in the vicinity of this or any other appliance.
6. An LP cylinder not connected for use should not be stored in the vicinity of this or any other appliance.

WARNING:

All barbecues and carts are designed for outdoor use only!
All barbecues are not intended for commercial use.

WARNING:

Read this Owner's Manual carefully and be sure your gas grill is properly assembled, installed and maintained. Failure to follow these instructions could result in serious bodily injury and/or property damage. This gas grill is intended for outdoor use only and is not intended to be installed in or on recreational vehicles or boats.

Note to Installer: Leave this Owner's Manual with the consumer after delivery and/or installation.

Note to Consumer: Leave this Owner's Manual in a convenient place for future reference.

C US

Design Certified
Unit approved by
CSA Laboratories under standard
ANSI Z21-58b-2002/CGA 1.6b-2002

Customer Service Helpline: If you have questions about assembly or grill operation, or if there are damaged or missing parts when you unpack this unit from the shipping box, call us Monday through Friday at 1-800-752-3085

REV 061605

Safety Information

⚠ WARNING

Fuels used in gas or oil-fired appliances and the products of combustion of such fuels, contain chemicals known to the State of California to cause cancer, birth defects and/ or other reproductive harm.

This warning is issued pursuant to California Health & Safety Code Sec. 25249.6.

⚠ WARNING

Failure to comply with these instructions could result in a fire or explosion that could cause serious bodily injury, death, or property damage.

⚠ WARNING

Your grill will get very hot. Never lean over the cooking area while using your grill. Do not touch cooking surfaces, grill housing, grill lid or any other grill parts while the grill is in operation, or until the grill has cooled down after use.

Failure to comply with these instructions may result in serious bodily injury.

You have bought a quality gas product from Barbeques Galore. All gas products require careful installation and or assembly and pre-operational testing. We recommend that our trained staff assemble, test and if necessary install your new purchase for you.

Barbeques Galore cannot be held responsible for any damages to persons or property resulting from improper assembly or installation.

If you chose to assemble, test and install your own unit, please follow the manufacturer's instructions explicitly.

This Outdoor Cooking Gas Appliance is not intended to be installed in or on recreational vehicles and/or boats.

LOCATION: FOR OUTDOOR USE ONLY.

When choosing a location for your Gas grill, keep in mind that it should not be located under any overhead unprotected combustible construction. The sides and bottom of the grill should not be any closer than **14 inches** to combustible construction and back of the grill should not be any closer than **16 inches** to combustible construction.

GAS PRESSURE

The Propane Gas Grills are designed to operate on propane at a gas pressure regulated at 11" water column (W.C.) when equipped with the correct Propane Orifices on the valves and a **Propane Regulator** on the supply line.

The Natural Gas Grills are designed to operate on Natural Gas at a gas pressure regulated at 4" water column (W.C.) when equipped with the correct Natural Gas Orifice on the valves and a **Natural Gas Regulator** on the supply line.

GENERAL INFORMATION

The installation of your Gas grill must meet all local codes and/or gas utility requirements or, in the absence of local codes, with the National Fuel Gas Code, ANSI Z223.1.

CAUTION: LEAK CHECKING

Check all gas connections with a soap solution to be sure they are tight and leakproof. To make soap solution, mix one part water with one part liquid detergent. With heat control knobs at "OFF position, turn gas supply on. Apply the mixture to all gas pipe connections. Soap bubbles will appear if connections are not properly sealed; repair as necessary. Never test for gas leaks with a lighted match or open flame.

PROPANE MODELS:

Correct LP Gas Tank Use

LP gas grill models are designed for use with a standard 20 lb. Liquid Propane Gas (LP gas) tank, not included with grill box. **Never** connect your gas grill to an LP gas tank that exceeds this capacity. A tank of approximately 12 inches in diameter by 18-1/2 inches high is the maximum size LP gas tank to use. A Propane tank with an OPD (Overfill Prevention Device) must be used. This safety feature prevents the tank from being over-filled which can cause malfunction of the LP gas tank, regulator and/or grill.

The LP gas tank must be constructed and marked in accordance with specifications of the U.S. Dpt. of Transportation (DOT). In Canada, the LP gas tank must meet the Canadian Transportation and Communications (CTC) specifications. Also be sure to read and follow all LP instructions on the following page.

If the outdoor cooking gas appliance is not in use, the gas must be turned off at the supply cylinder.

(a) Do not store a spare LP-gas cylinder under or near this appliance;

(b) Never fill the cylinder beyond 80 percent full; and

(c) If the information in (a) and (b) is not followed exactly, a fire causing death or serious injury may occur.

1. The LP gas tank has a shutoff valve, terminating in an LP gas supply tank valve outlet, that is compatible with a Type 1 tank connection device. The LP gas tank must also have a safety relief device that has a direct communication with the vapor space of the tank.
2. The tank supply system must be arranged for vapor withdrawal.
3. The LP gas tank used must have a collar to protect the tank valve.

- **Never** connect an unregulated LP gas tank to your gas grill. The gas regulator assembly supplied with your gas grill is adjusted to have an outlet pressure of 11" water column (W.C.) for connection to an LP gas tank.

- Only use the regulator and hose assembly supplied with your gas grill. Replacement regulators and hose assemblies must be those specified by manufacture.
- Have your LP gas tank filled by a reputable propane gas dealer and visually inspected and re-qualified at each filling.
- Never fill the gas tank beyond 80% full. Have your propane gas dealer check the release valve after every filling to ensure that it remains free of defects.
- Always keep LP gas tanks in an upright position.
- Do not store (or use) gasoline or other flammable vapors and liquids in the vicinity of this gas grill.
- An LP gas tank that is not connected for use must NOT be stored on bottom shelf or in the vicinity of this or any other gas grill.
- Do not subject the LP gas tank to excessive heat.
- **Never** store an LP gas tank indoors. If you store your gas grill in the garage or other indoor location, **always** disconnect the LP gas tank first and store it safely outside and out of reach of children.
- LP gas tanks must be stored outdoors in a well-ventilated area. Disconnected LP gas tanks must not be stored in a building, garage or any other enclosed area.
- When your gas grill is not in use the gas must be turned off at the LP gas tank.
- The regulator and hose assembly must be inspected before each use of the grill. If there is excessive abrasion or wear or if the hose is cut, it must be replaced prior to the grill being used again.
- Keep the gas regulator hose away from hot grill surfaces and dripping grease. Avoid unnecessary twisting of hose. Visually inspect hose prior to each use for cuts, cracks, excessive wear or other damage. If the hose appears damaged do not use the gas grill. Call our service center at **1-800-752-3085**.
- **Never** light your gas grill with the lid closed or before checking to insure the burner tubes are fully seated over the gas valve orifices.
- **Never** allow children to operate your grill. Do not allow children to play near your grill.

⚠ WARNING

A strong gas smell, or the hissing sound of gas indicates a serious problem with your gas grill or the LP gas tank. Failure to immediately follow the steps listed below could result in a fire or explosion that could cause serious bodily injury, death, or property damage.

- Shut off gas supply to the grill.
- Turn the Control Knobs to the **OFF** position.
- Open grill lid.
- Get away from the LP gas tank.
- Do not try to fix the problem yourself..
- If odor continues or you have a fire you cannot extinguish, call your fire department.

Do not call near the LP gas tank because your telephone is an electrical device and could create a spark resulting in fire and/or explosion.

NOTE: The normal flow of gas through the regulator and hose assembly can create a humming noise. A low volume of noise is perfectly normal and will not interfere with operation of the grill. If humming noise is loud and excessive you may need to purge air from the gas line or reset the regulator excess gas flow device. This purging procedure should be done every time a new LP gas tank is connected to your grill. For help call the Customer Service Helpline for assistance.

The barbecue must be isolated from the gas supply piping system by closing its individual manual shut-off valve during any pressure testing of the gas supply piping system at test pressures **equal to or less than** ½ psi (3.5 kPa)

The units are supplied from the factory equipped for use with natural gas and includes a natural gas regulator. If operation with propane gas is desired, simply follow the instructions found on **page 4** of this manual. In addition, a **propane gas regulator MUST** be installed in the gas supply line from the propane gas tank.

Please remember to check all gas connections for leaks after the piping is completed. Follow the procedure found on **page 1**, under the heading **"CAUTION: LEAK CHECKING."**

CAUTION: ELECTRICAL WARNING

If your grill incorporates electrical components they must be installed in accordance with local codes or in the absence of local codes, with the **National Electrical Code, ANSI/NFPA No.70-1987**.

The electric cord for the optional rotisserie motor is equipped with a three-prong 115v plug, and must be used with a grounded outlet. If it is not designed for a three wire plug, you must obtain an adapter and properly ground it before using the rotisserie. Do not cut or remove the grounding prong from the plug.

KEEP ANY ELECTRICAL SUPPLY CORD AND THE FUEL SUPPLY HOSE AWAY FROM ANY HEATED SURFACE.

Failure to comply with these instructions may result in serious bodily injury.

The LP gas pressure regulator and hose assembly supplied with this unit must be used without alteration. If this assembly needs to be replaced, use only the type specified by Barbeques Galore for this appliance.

When connecting the LP gas regulator to the supply cylinder, please remember that the threaded fittings on the QCC-1 valve tightens clockwise (**Figure 1**). This connection must be tightened fully to prevent leakage.

I) If your Propane tank should ever require repainting use a light colored paint to allow heat reflection. Never use a dark color to repaint the Propane tank.

This appliance is for outdoor use in a well-ventilated area only. This unit must not be used in a building, garage or any other enclosed area.

BUILT-IN UNITS UTILIZING NATURAL GAS

When connecting a built-in unit to the natural gas supply in your home, please ensure the pipe joint compound is resistant to the action of natural gas. In addition, please observe the following:

The barbecue and its individual shut-off valve must be disconnected from the gas supply piping system during any pressure testing of that system at test pressures in **excess** of ½ psi (3.5 kPa).

Barbeques Galore Limited Warranty

Barbeques Galore hereby warrants to the ORIGINAL PURCHASER of this Barbeques Galore Gas Barbecue that it will be free of defects in material and workmanship from the date of purchase as follows:

Solid Cast Stainless Steel Burners .....Lifetime of Grill
All Stainless Steel exterior parts .....Lifetime of Grill
Painted BBQ Frames, Igniter Assemblies and All Remaining Parts.....2 years
...when assembled and operated in accordance with the printed instructions that accompany it.

High cooking temperatures, excessive humidity, chlorine, fertilizers, lawn pesticides and salt can affect the Stainless Steel components and for these reasons, the limited warranties DO NOT COVER DISCOLORATION OR RUST, unless there is a loss of structural integrity on the grill component.

Barbeques Galore shall not be liable under this or any implied warranty for incidental or consequential damages and Barbeques Galore's liability is limited to the purchase price of this barbecue. This warranty gives you specific legal rights, and you may also have other rights which vary from state to state. This warranty is applicable in the United States and Canada. No one else is authorized to perform any obligations under this warranty.

Barbeques Galore requires reasonable proof of your date of purchase. THEREFORE YOU SHOULD RETAIN YOUR SALES SLIP OR INVOICE AND RETURN THE BARBEQUES GALORE PRODUCT REGISTRATION CARD IMMEDIATELY.

This limited warranty shall be limited to the repair or replacement of parts which prove defective under normal use and service and which on examination shall indicate to Barbeques Galore's satisfaction they are defective. Before returning any parts to Barbeques Galore, contact our **Customer Service Center** at **(800) 752-3085** or email us at customerservice@bbqgalore.com

If Barbeques Galore confirms the defect and approves the claim, Barbeques Galore will elect to repair or replace such part without charge. Parts returned to Barbeques Galore must be sent freight prepaid to Barbeques Galore, Inc. Customer service center 3355 East Cedar, Suite B, Ontario, CA 91761 or to the nearest Barbeques Galore Store. Barbeques Galore will return parts to the purchaser freight or postage prepaid.

The LP tank manufacturer is solely responsible for the materials, workmanship and performance of the tank. If the tank has a defect, malfunctions, or you have questions regarding the tank, call the tank manufacturer's customer service center. The phone number is on the warning decal which is permanently attached to the tank. If the tank manufacturer has not resolved the issue to your satisfaction, then call the Barbeques Galore store nearest you.

Model Number _____ Serial Number _____

Date of Purchase _____ Purchase From _____

Warranty Restrictions

Converting these barbecues tp Propane can be done provided the appropriate Propane Conversion Kit is used and it is done by a Barbeques Galore Technician or a licensed plumber. Failure to follow these instructions will void the warranty and is also extremely dangerous and could cause a fire or injury.

This warranty is void if grill is used for commercial or rental purposes.

This warranty applies only when the grill is used in the United States, Canada & Australia.

This warranty gives you specific legal rights, and you may also have other rights which vary from state to state.

FILLING OR REFILLING THE PROPANE GAS CYLINDER

IMPORTANT: **This barbecue is intended for use with LP cylinders equipped with a QCC-1 / OPD valve (Quick Connect Coupling Type 1 with Overfill Prevention Device) .**

⚠ WARNING **Purging and filling of LP-Gas cylinders must be performed by personnel who have been thoroughly trained in accepted LP-Gas industry procedures. Failure to follow this instruction may result in explosion, fire, severe personal injury, or death.**

ALL NEW CYLINDERS MUST BE PURGED BEFORE THE FIRST FILLING.

A) Turn heat control knobs and Gas Cylinder valve to "OFF" position.

B) Propane cylinder equipped with QCC-1 valve (**Figure 1**) is equipped with a right-handed thread. Turn black plastic nut counter-clockwise to loosen.

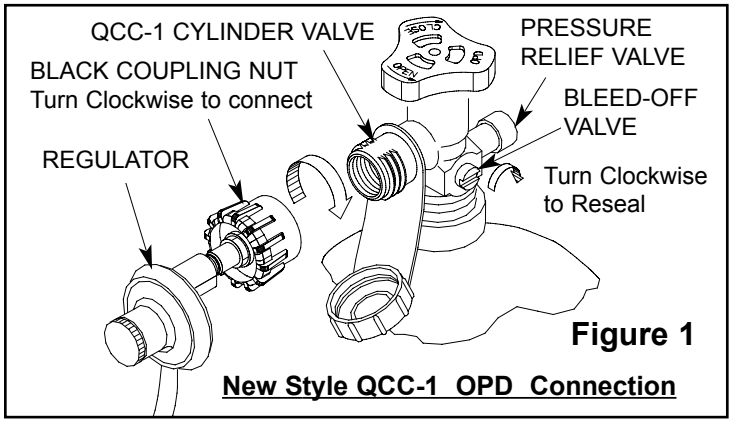

C) Remove cylinder from Grill. Have cylinder filled by your local Propane gas dealer.

D) Some Propane Cylinders have a bleed-off valve (**Fig. 1**). This bleed-off valve should be inspected for leaks after each refilling of the tank. Turn clockwise to reseal.

E) Fasten full Propane tank to Grill and connect **QCC-1** fitting to tank valve (**Figure 1**) by turning clockwise.

F) With heat control knobs still at "OFF" position, turn on Cylinder valve.

USING SOAP SOLUTION, TEST THE GAS CONNECTION FOR LEAKS. (See **Page 1** for information on mixing and applying soap solution.) If bubbles appear, there is a leak; tighten or correct gas connections as necessary. After checking for leaks, turn valve off.

Gas Barbecue Assembly Instructions

1. Remove unit from carton carefully, ensuring drip tray does not fall out.
2. Check barbecue for damage.
3. Check that proper orifices are installed in the valves.

IMPORTANT: The Turbo STS Barbecue is supplied from the factory setup for Natural Gas and fitted with Natural Gas Orifices (see **Figure 2**).

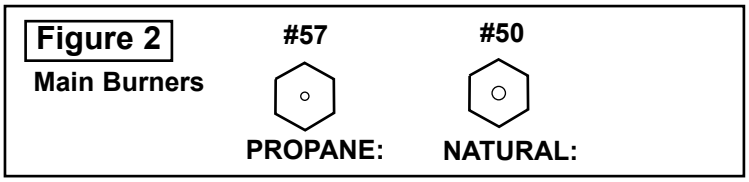

If you are going to use this barbecue with Propane, it MUST be converted to operate on Propane gas by a Barbeques Galore Technician or a qualified gas plumber.

A company supplied *Propane Conversion Kit* must be used to convert the barbecue to the correct gas.

Conversion Procedure:

3a. Remove all the existing Natural Gas Orifices.

3b. Locate the Propane Gas Orifices and install them into the barbecue as shown in **Figure 3a**.

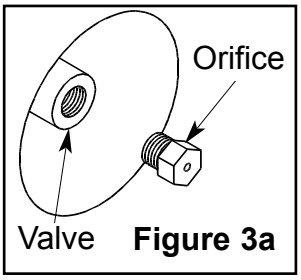

3c. Place the new Propane Rating Label over the existing label on the right hand side of the barbecue frame.

3d. Connect the barbecue to an appropriate regulated Propane Gas supply.

The **Natural Gas** orifice has a substantially larger hole size than the **Propane** orifice and is easily distinguishable. If you have to change them, use a wrench to undo the orifice from the valve (see **Figure 3a**) and install the correct orifice making sure they are wrench tight. Do not over-tighten. Repeat for the other orifices.

NOTE: Ensure barbecue is connected to the appropriate regulated gas supply determined by the orifices. Failure to use the appropriate gas regulator voids all warranties.

Conversion Procedure for Rotis Burner: (Rotis models only)

Remove Access Panel and replace existing Natural Gas Orifices #52 with the Propane Gas Orifices #62.

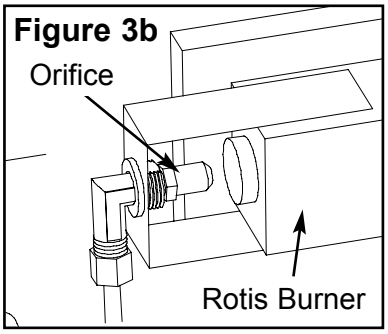

This Gas Grill must be connected to an appropriate REGULATED gas supply - refer to Safety Information.

Installing Stainless Burners

4. Remove Drip Tray from packaging carefully. We recommend that you fill the drip tray with Ultrasorb or sand, approximately ¼" deep, prior to using the grill initially, as this will help absorb any grease or residues from the barbecuing process. Change the Ultrasorb on a regular basis.

TIP: *- For easier clean up, line the grease tray with heavy duty foil (shiny side down) and cover with Ultrasorb or 1/4" of sand.*

NOTE: You must NEVER use just foil, as the reflected heat will be excessive and could damage the barbecue - **foil must be covered with Ultrasorb or 1/4" of sand.**

5. Your barbecue has been supplied with a pair of Side Trims (**Figure 4**) which are used for built-in installations. If you plan to install your barbecue on a Turbo STS Cart, the Side Trims are not required.

Figure 4

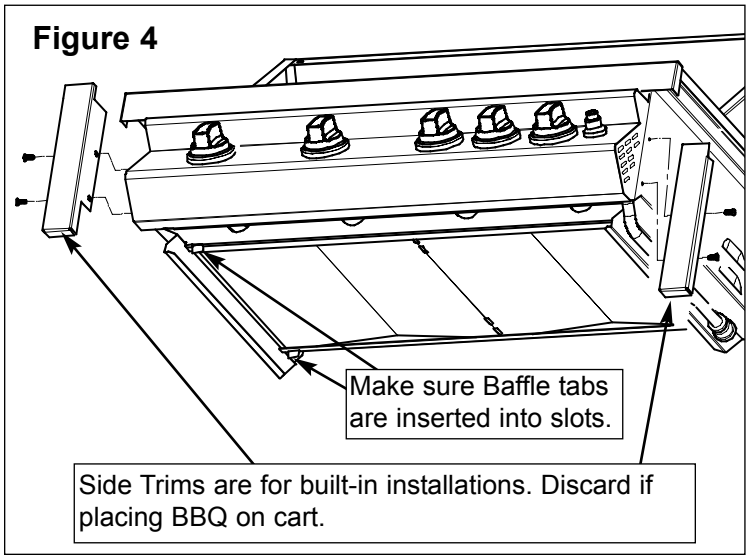

6. Prior to installing barbecue, make sure Baffle is properly installed inside barbecue since it may have been dislodged during shipping. The tabs at the ends must be inserted into the slots on the four corners of the barbecue frame (see **Figure 4**).

7. **Note: Prior to installing burners, check to make sure Air Adjustment Bolt on the side of each burner is screwed all the way in and secured with locking nut.** Place burners into barbecue as shown in **Figure 5**..The open end of the burner has to be installed over stem of valve and then the rear of the burner is then lowered down onto the back bracket locating the cast peg into the appropriate hole (**Figure 6**).

Figure 5

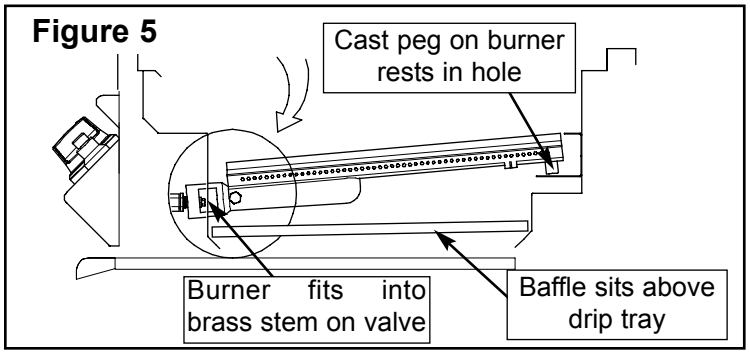

Figure 6

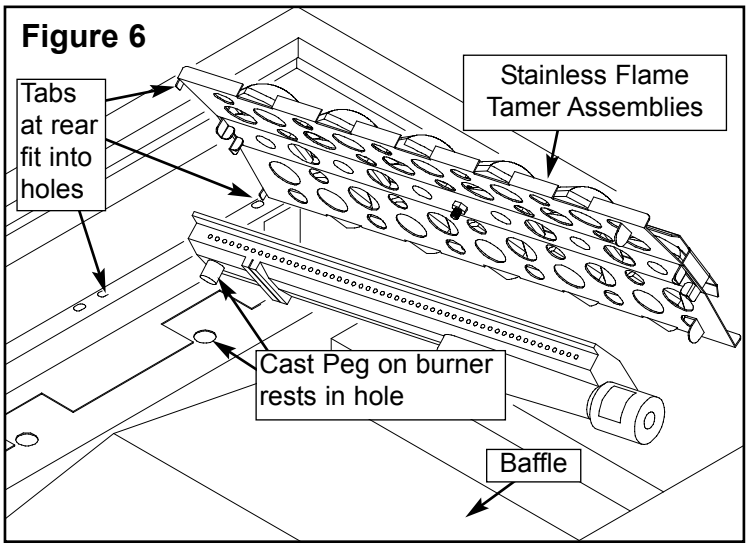

6. Install Stainless Flame Tamer Assemblies into the barbecue above the Burners, ensuring tabs fit into locating holes (**Figure 6**).

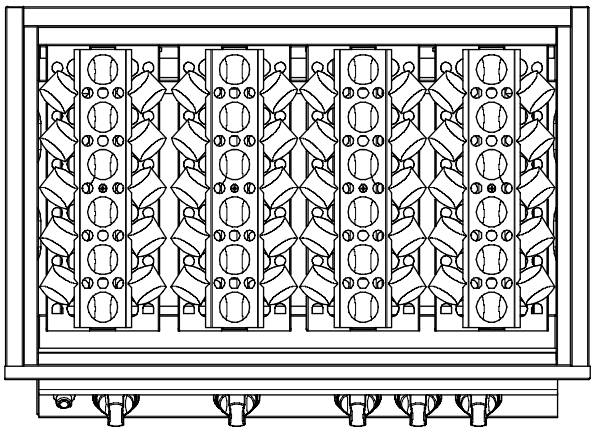

Figure 7

7. Place the Cooking Grills in position (see **Figure 11**).

Tip: *- A light coating of vegetable oil will prevent food from sticking to the grills.*

Turbo Stainless Rotisserie Assembly

26” - SKU# 287904
31” - SKU# 287912

This appliance is for outdoor use on grill only.

Figure 8

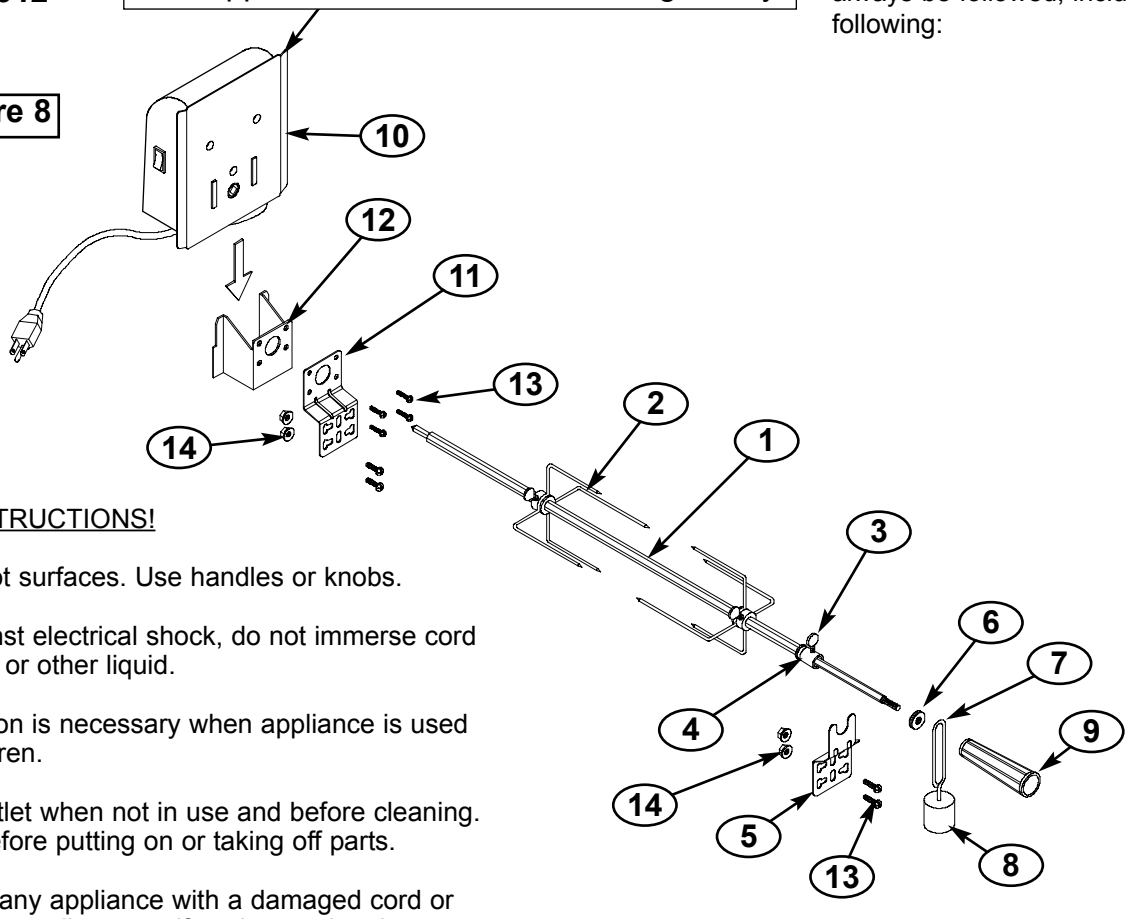

Safety Information:

When using electrical appliances, basic safety precautions should always be followed, including the following:

1) READ ALL INSTRUCTIONS!

2) Do not touch hot surfaces. Use handles or knobs.

3) To protect against electrical shock, do not immerse cord or plug in water or other liquid.

4) Close supervision is necessary when appliance is used by or near children.

5) Unplug from outlet when not in use and before cleaning. Allow to cool before putting on or taking off parts.

6) Do not operate any appliance with a damaged cord or plug, or after the appliance malfunctions or has been damaged in any manner. Return appliance to the nearest authorized service facility for examination, repair, or adjustment.

7) The use of accessory attachments not recommended by the appliance manufacturer may cause injuries.

8) Do not let cord hang over edge of table or counter, or touch hot surfaces.

9) Do not place on or near a hot gas or electric burner, or in a heated oven.

10) Extreme caution must be used when moving an appliance containing hot oil or other hot liquids.

11) Always attach plug to appliance first, then plug cord into the wall outlet. To disconnect, turn any control to “OFF”, then remove plug from wall outlet.

12) Do not use appliance for other than intended use.

13) The motor is rated for 110/120v, 60Hz AC current.

Turbo Stainless Rotisserie

Item	Qty	Description	Part #
1a	1	Spit Rod	P05508065A
1b	1	Spit Rod	P05508066A
1c	1	Spit Rod	P05508067A
2	2	4-Prong Spit Fork	P05508077A
3	5	1/4-20 Thumbscrew	S196G04081
4	1	Shaft Collar	P05508061A
5	1	Shaft Bracket	P03308003C
6	1	Key Washer	P05508064A
7	1	Counterbalance Ring	P05508062A
8	1	Counter-balance	P05508063A
9	1	Black Phenolic Handle	P05508068E
10	1	110vAC Motor w/ 4 ft. cord	P07101016B
11	1	Motor Bracket Support	P03308004C
12	1	Motor Bracket	P03308005C
13	4	1/4-20 x 1/2” Phillips Head Screw	S112G04081
14	4	1/4-20 Flange Nut	S
15	4	3/16-18 x 1/4” Phillips Head Screw	S112G03041

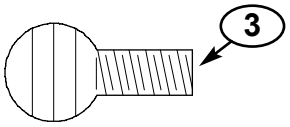

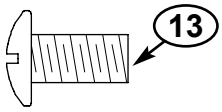

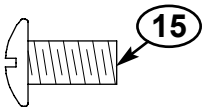

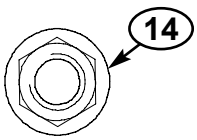

Rotisserie Assembly to Barbecue:

1. Assemble Motor Support Bracket **(11)** and Motor Shield **(12)** using four screws **(15)** as shown in **Figure 9**.

2. Attach Motor Bracket Assembly to side of barbecue frame (can be mounted on either the left or right side of the frame) using two screws **(13)**, and two nuts **(14) (Fig. 9)**.

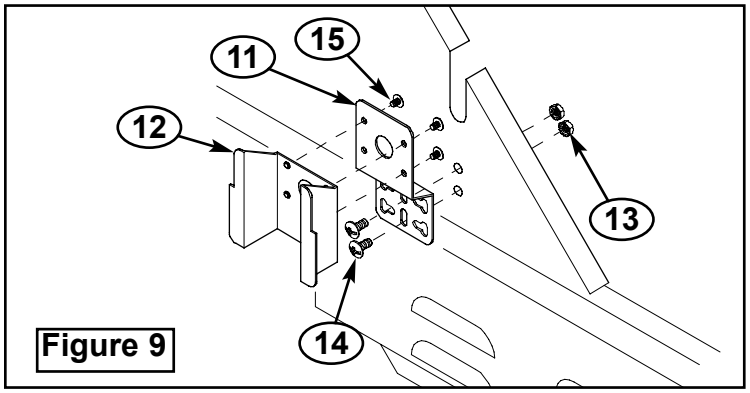

Figure 9

3. Assemble Key Washer **(10)**, Counterbalance **(11)** and Handle **(12)** to Spit Rod **(6)** as shown in **Figure 10.** Slide Shaft Collar **(8)** onto Spit Rod with long end towards handle.

4. Slide Spit Forks **(7)** into position (**Figure 8**). Center meat on spit, then secure in place with the Spit Forks. Test the loaded spit for proper balance by supporting both ends in your palms. Roll Spit Rod and allow heaviest load to roll downward.

5. Attach Shaft Support Bracket **(5)** to opposite side and secure with two screws **(13)** and Kep Nuts **(14)** (**Fig.10)**.

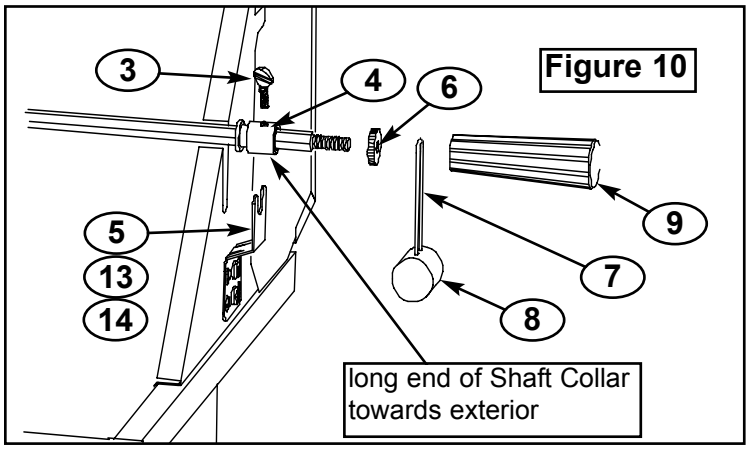

Figure 10

6. Place assembly into barbecue making sure Spit Rod is inserted into Motor and groove on Shaft Collar **(8)** rests in slot on Support Bracket **(5)** (**Figure 10**). Make sure long end of collar sticks out of the barbecue. Secure position and tighten Thumbscrew **(9)**.

7. Position counterbalance weight upwards so as to counteract opposing weight. Tighten Counterbalance by tightening Handle and Key Washer.

8. Ensure that all Bolts are tightened securely.

NOTE: Cooking Grates are removed from Barbecue for all Rotisserie Cooking. (Drip Trays are recommended for use in all Rotisserie Cooking), see **Figures 12 & 13.**

Getting To Know Your Gas Grill & Smoker Lid

Figure 11

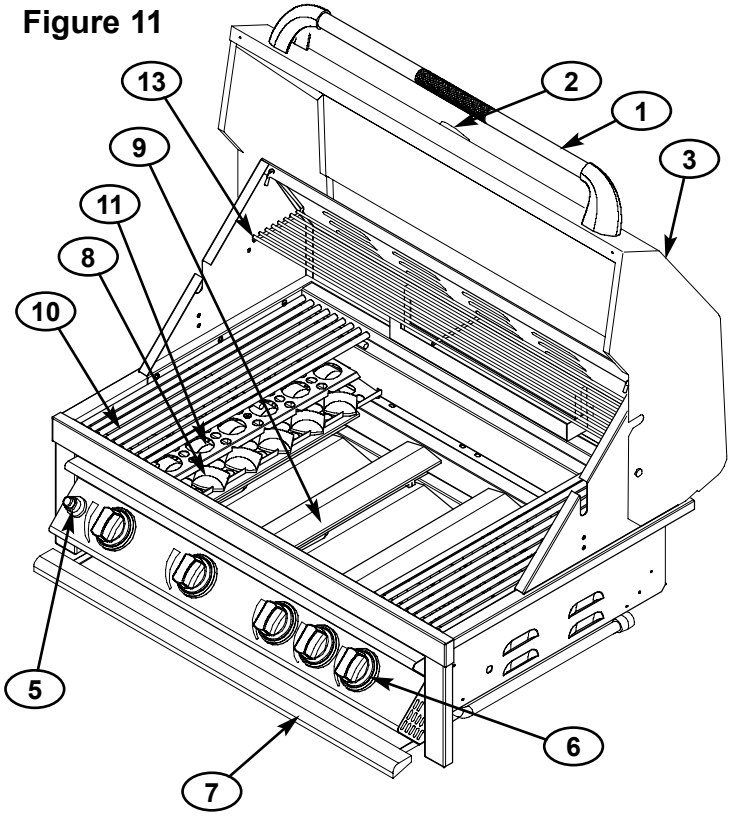

Figure 12

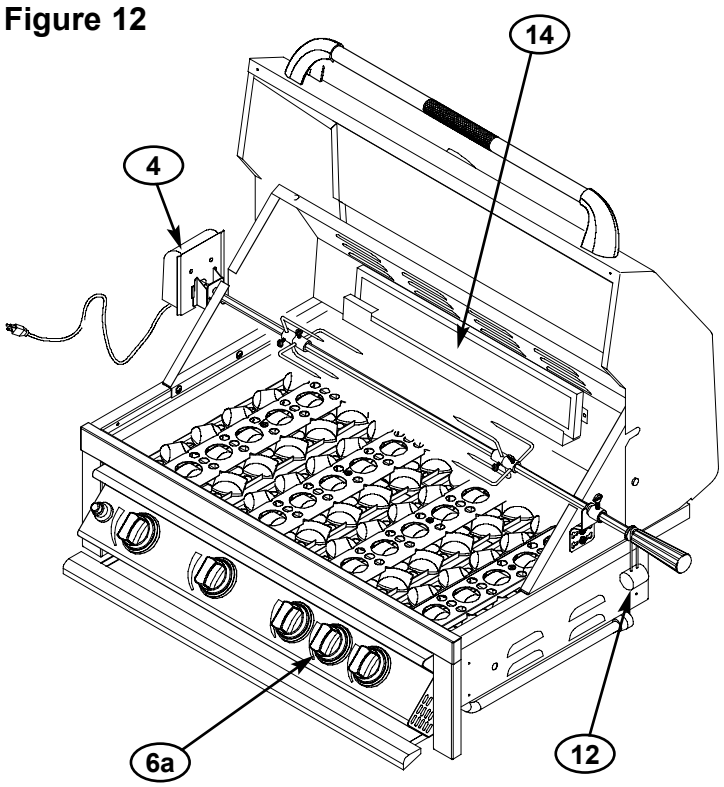

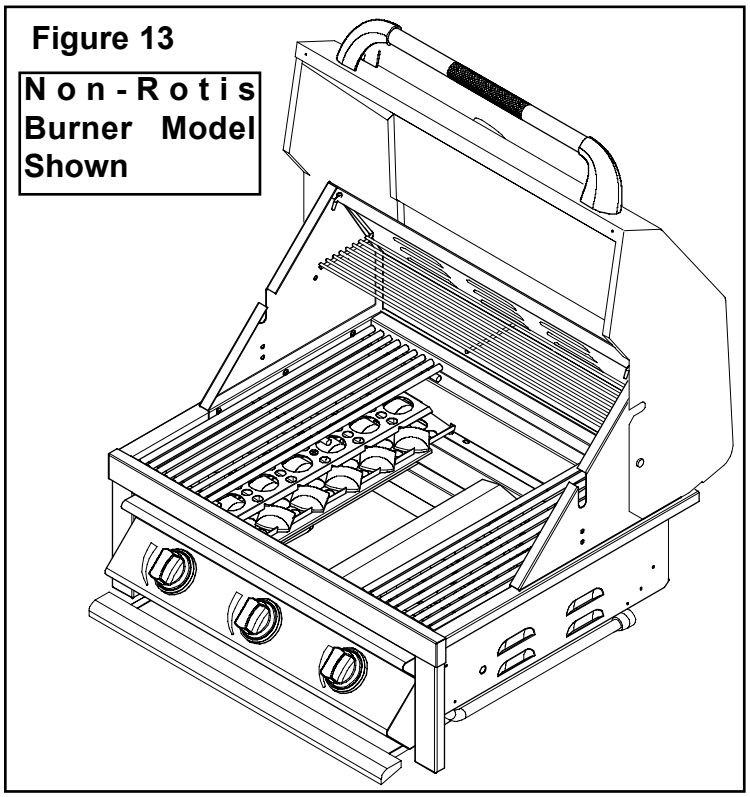

1. **Lid Handle:** Mounted on front to make opening and closing the lid easier.

2. **Heat Indicator:** Indicates the temperature inside the lid. Invaluable when cooking by indirect heat and smoking.

3. **Smoker Lid:** Converts your gas grill into a smoker oven by keeping the smoke and heat in. Try to keep it closed at all times when grilling too, as it conserves energy, saves money, minimizes flare-ups and improves flavor.

4. **Rotisserie Kit:** The Rotisserie is equipped with a heavy duty stainless steel motor to turn the solid rotisserie. This kit comes standard with all rear burner models.

5. **Battery holder for Rear Rotisserie Burner model only –** Uses AA battery.

6. **Heat Control Knob:** Each heat control knob has infinite settings for complete cooking flexibility. As a safety precaution, knob has been designed so that it must be PUSHED IN AND TURNED *COUNTERCLOCKWISE* TO HIGH in order to turn the gas on.

6a. **Rear Rotisserie Control Knob -** Push in and turn to high and HOLD in for 10 seconds to ignite the burner. This also allows the required amount of time for the thermocouple to heat up.

7. **Drip Tray:** This full width tray is designed to catch all the fat, etc., which is not burnt off. It is advisable to fill it with sand, approximately 1/4" deep, prior to using the grill initially as this will assist cleaning it out when required. For easier clean up, line the grease tray with Heavy Duty foil (shiny side down) - then you MUST cover the foil with 1/4" sand. DO NOT USE FOIL ONLY - IT MUST BE COVERED WITH SAND.

8. **Ceramic Briquettes:** The long life Ceramic Briquettes radiate the heat from the burners evenly throughout the grill. Briquettes should be spaced evenly, one layer deep, on top of the *Stainless Flame Tamer* trays.

9. **Stainless Steel Burners:** The specially designed Stainless Steel burners are designed to give an even spread of heat throughout the entire length to give perfect cooking results every time.

10. **Stainless Steel Cooking Grills:** These stainless steel Grills provide a uniform heated cooking surface to sear your steak to perfection. It may be necessary to remove grills if the rotisserie is used to gain greater depth (**Figure 11**).

11. **Stainless Flame Tamers:** Flame Tamers support the ceramic briquettes and help to dissipate the heat evenly and prevent excessive flare-ups.

12. **Counterbalance:** The optional Deluxe Stainless Turbo Rotisserie includes a Counterbalance. This feature provides perfect balance for Rotisserie cooking.

13. **Warming Rack:** Designed to keep your food warm while you finish cooking (**Figure 11**).
    NOTE: *Warming Rack must be removed when a Rotisserie is used* (**Figures 12 & 13**).

14. **Rotisserie Burner** (only available on Rear Burner models)**:** The Stainless Turbo Rotisserie models are equipped with a rear rotisserie infrared burner (**Figure 13**) which allows for slow rotisserie cooking of meats and poultry. Infrared burners radiate heat onto to the outer surface of the food. This allows cooking without the grease drippings burning on the main burner radiants.

LOCATION

THE GAS GRILL IS DESIGNED FOR OUTDOOR INSTALLATION ONLY.

It may be installed on a covered or open patio provided the **sides** and **bottom** are at least **14"** away and the **back** at least **16"** away from **any combustible construction**. The grill must not be located under any overhead unprotected combustible construction.

Before each use, carefully and thoroughly check regulator hose. If it is evident there is excessive abrasion or wear, or the hose is cut, it must be replaced prior to the appliance being put into operation. Contact your BBQ Galore retailer or by calling BBQ's Galore at (800) 752-3085.

LIGHTING INSTRUCTIONS

Important: Do not bend directly over grill when lighting the burner. **Lid must be in open position before lighting.** Turn all knobs to “OFF”. Turn gas supply on. If you smell gas, SHUT OFF GAS SUPPLY! Call for service.

1. Familiarize yourself with the safety guidelines at the front of this manual. Do not smoke while lighting grill or checking gas supply connections.
2. Be sure the LP gas tank is filled.
3. Open the Grill Lid.

⚠ WARNING

Failure to open Grill Lid during the lighting procedures could result in a fire or explosion that could cause serious bodily injury, death, or property damage.

4. Check that the end of each burner tube is properly located over each valve orifice.
5. Make sure all gas connections are securely tightened.
6. Set control knobs to OFF and open the LP gas tank valve slowly until 1/4 to 1/2 open.
7. **All the burners are equipped with a pilot flame ignition system.** Push the Control Knob in and turn **slowly** (counterclockwise) to **HIGH.** If you have difficulty lighting the burner it may be necessary to turn and hold the Knob for 1 (one) second at the point prior to the Ignitor “clicking”. If burner does not light, turn knob to **OFF** position and repeat. If it fails to light again, turn control knob to the **OFF** position and wait 5 minutes for any accumulated gas to clear out of the grill.

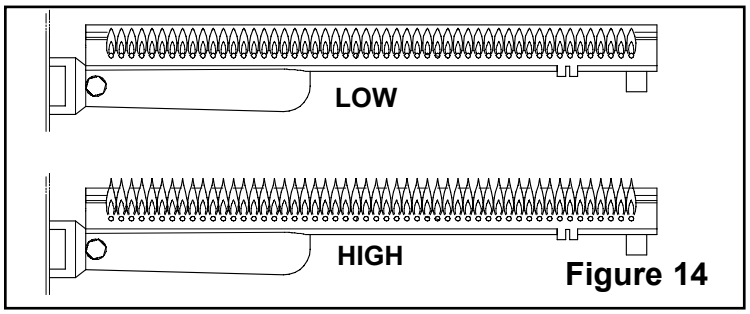

Figure 14

8. Adjust control knobs to your desired cooking temperature. If the knob is turned fully counterclockwise the lowest flame setting will occur. To visually check that the burner is operating look between the frame and tray at the flame. The flame should be approximately 1/2"-3/4" long with the high setting (see **Figure 14**).

Lighting Your Grill by Match

To light your gas grill by match, open the lid and light a match. Turn the right main burner control knob to the High setting to release the gas while holding the lit match over the lighting tube as shown in **Figure 15**. The burner should light within 5 seconds. If it fails to light, turn the valve off and wait 5 minutes before attempting to manually light the burner again.

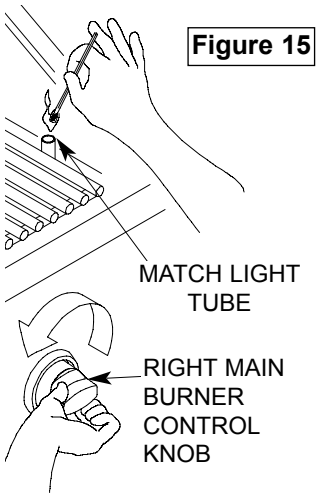

Figure 15

Shutting Down Your Grill:

After you have finished using the Gas grill turn all knobs to the OFF position. Close the valve on the gas supply.

Preheating the Grill:

Light the burners as previously directed and turn to high and allow the grill to preheat for **5 minutes maximum.** Lower the lid during this preheating period. Do not operate Rotisserie Burner (if equipped) during this preheating period.

IMPORTANT - Heat Control:

When cooking with lid closed, never exceed temperatures of **480°F (250°C).**

Direct Cooking:

Your Gas grill is equipped with a number of burners which can be regulated easily. This feature gives you the flexibility to cook enough hamburgers to feed the whole gang with all the burners at the same setting, or slow cook a casserole over low heat on one side of the grill while you sear a steak over a high flame on the other side, or just light one or two of the burners for a small meal.

Indirect Cooking:

Cook large cuts of meat to golden perfection with indirect heat. By using indirect heat, your food doesn't come in direct contact with flame, instead, the heat from the lighted side of the grill gently circulates throughout the grill cooking food above the unlighted burners with indirect heat (**Figure 16**).

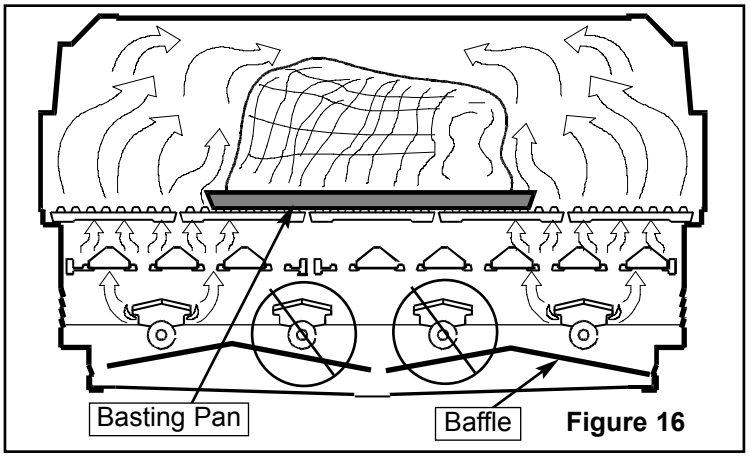

Figure 16

Closed Lid Saves Money:

When the smoker lid is closed you have a more constant temperature. Your food will cook faster, with fewer flare-ups and you will use less energy. Always use a drip tray when cooking roasts, whole fish, chickens and ALL rotisserie cooking. Use of a drip tray eliminates basting, since the juices drop into the drip pan, vaporize, rise and self-baste. Water, beer, wine, fruit juices or herbs in the drip pan adds flavor. Gravy or sauce can be made from the drippings. Disposable drip pans prevent flare-ups.

Flare-up Control:

Anytime you cook meat above an open flame you will have flare-ups since flare-ups are caused when the natural juices from the meat fall on the hot lava rock.

Flare-ups, and the resulting smoke, are what give meat cooked over an open flame the delicious outdoor flavor, so expect and encourage some flare-up. However, excessive flare-ups can be caused by cooking extra fatty foods directly on the grill, or by cooking with too high a temperature. These types of flare-ups should be controlled or your food will burn.

To prevent excessive flare-ups, trim off excess fat from meat and poultry before putting it on the grill, or cook particularly fatty meat such as duck, in a foil tray (or put the foil tray on the lava rocks directly under the meat). To control excessive flare-ups caused by too high a heat setting, turn the heat control knob to a lower setting.

Rotisserie Cooking:

A rotisserie is mostly used to cook large pieces of meat and poultry to assure slow, even cooking. The constant turning provides a self-basting action, making food cooked on a rotisserie exceptionally moist and juicy. Rotisserie cooking generally requires 1½ to 4½ hrs. to cook depending on the size and type of meat being cooked.

For successful rotisseriing, the meat should be centered and balanced as evenly as possible on the spit rod to avoid overworking the rotisserie motor (see *Rotisserie Assembly Instructions* on **page 5**).

Since indirect heat is often used in cooking on a rotisserie, a foil or aluminum drip pan is advisable to prevent excessive flare-ups. Generally, the cooking grills are removed to allow for the swing of the rotisserie. A basting pan is placed under the rotis area on top of the radiants to catch the drippings.

Prior to lighting barbecue, remove the *Ceramic Briquettes* on the *Flame Tamer Trays* that lie directly underneath the meat so that the drip pan rests directly on the empty *Flame Tamer Trays* (**Figure 17**). Pan can be emptied with a bulb baster.

To mount the meat of poultry on the rotisserie, one fork of the rod is removed. The spit rod is pushed through the food and secured with the fork and the remaining fork is replaced back in position to secure the other end of the meat.

It is important to secure any loose pieces so that when the rotisserie rotates, a part does not become dislodged and catch on the basting pan!

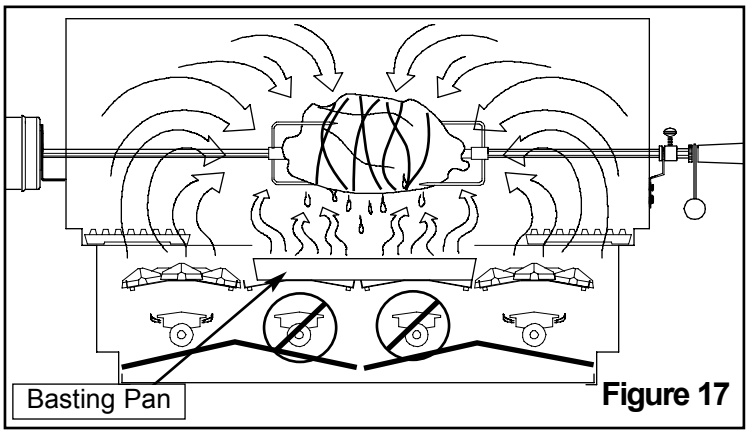

Figure 17

Tooth picks, pins, or skewers are a few methods of securing. With meats, having them rolled and tied is the best method.

Using Your Rotisserie Burner (if equipped):

The Turbo Rotisserie models are equipped with the rear infrared rotis burner which allows for slow rotis cooking of meats and poultry. Infrared burners radiate heat onto to the outer surface of the food. This allows cooking without the grease drippings burning on the main burner radiants.

Rotisserie Burner Lighting Instructions

Note: The location of the Rotisserie burner makes it more susceptible to winds that will decrease the performance of your rotisserie cooking. For this reason you should not operate the back burner during windy weather conditions.

1. Familiarize yourself with the safety guidelines at the front of this manual. Do not smoke while lighting grill or checking gas supply connections.
2. Be sure the LP gas tank is filled.
3. Check that the end of each burner tube is properly located over each valve orifice.
4. Make sure all gas connections are securely tightened.
5. Open the Grill Lid. Failure to do so can result in fire or explosion.
6. Set Rotisserie Burner control knob to OFF and open gas supply.
7. Push and turn the Rotisserie Burner Control Knob (located between the two burner control knobs at the right side of the control panel, see **Figure 18**) to HIGH and then HOLD the knob in for 10 seconds until the thermocouple heats up.

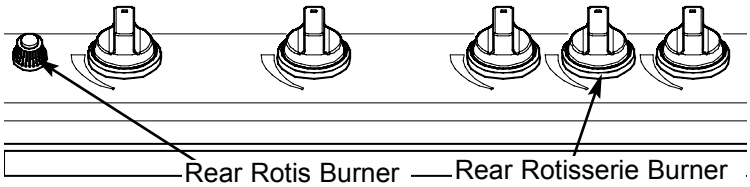

Figure 18

8. If the rear burner does not light, turn the control knob OFF, wait 5 minutes for the gas to clear, then retry.

9. Once lit, the Rotisserie Burner will reach cooking temperature quickly. The orange/red glow will even out in about 5 minutes.

10. For best results, always rotisserie cook with the grill lid down and the Rotisserie Burner control knob set to HIGH. Do NOT use the main grill burners when the Rotisserie Burner is in operation.

Do not attempt to regulate the rotisserie burner by using the control knob. This control has a fixed setting and is not adjustable.

NOTE: Initially, the Ceramic Panel will have a blue flame that, after some time, will change to an orange flame and the Ceramic Panel will glow an orange color. *This may not be evident in bright daylight.*

Cleaning Up After Using Your Grill:

To keep your grill ready for the next time you want to use it, turn the grill off, then take a long handled soft brass bristle brush and brush off the cooking grills. Be careful, they're hot! Protect your hand from the heat by using an oven mitten to hold the brush.

Cooking Tips

Food Preparation:

Preparing food to be cooked on your gas grill requires no more effort than if you were preparing it to be cooked on your indoor range. The following tips will help you get the best results right from the start.

1. Trim off excess fat from meat, leaving a thin strip round the edges. To prevent meat from curling up while it cooks, slash the remaining fat at two-inch intervals, taking care not to cut into the meat. Trim off all excess fat from poultry before cooking

2. Use tongs instead of a fork when turning meat or poultry. The prongs of a fork pierce the meat or poultry, causing it to lose it's natural juices.

3. If you use a tomato or sugar base sauce for basting, do not apply until the last five or ten minutes of cooking period. Use over a longer period of time will result in overbrowning or charring.

4. Poultry, fish and natural lean meats should be brushed with cooking oil, butter, or margarine several times during the cooking period to avoid their drying out.

5. Meats and poultry should be brought to room temperature before cooking. Frozen foods such as fish and vegetables should be put on the grill without thawing.

6. Salt meat, fish or poultry after cooking not before or during cooking periods. Salt tends to draw the natural moisture out of food, causing it to dry out. Other spices including pepper and garlic may be freely applied.

Smoke Cooking:

Smoke cooking is an exceptionally slow method of cooking in which a flavoring source is added to the *Ceramic Briquettes* in order to impart its own delectable flavor to the meal for a deep smoke flavor.

Soak a flavoring source such as hickory chips, green twigs of apple-wood or wild cherry, garlic cloves or bay leaves in water for 30 minutes prior to use.

Loosely wrap in a single layer of aluminum foil, leaving one end slightly open or place on the *Ceramic Briquettes* at the beginning of the cooking period. For a lighter smoke flavor, add the pre-moistened wrapped flavor source to the *Ceramic Briquettes* during the last half hour of the cooking period.

Remember smoke cooking is slow cooking. You can't hurry it along without unsatisfactory results. Keep the heat control knobs set at LOW and the lid closed.

Wood Chips In A Gas Grill:

Wood chips should be soaked for a minimum of 30 minutes. Presoaked chips or chunks may be thrown directly onto fire, but they must be in a container or wrapped in foil, log fashion, for use in gas grills.

If smoking is expected to last for a long period of time, you should keep chips soaking in the event you need to throw more on the fire or to add to the container or make another foil log.

Maintenance Guide

On at least a monthly basis during times when the BARBECUE is in use, and at least every other week during high usage periods, the following items must be inspected:

1. Clear the area surrounding the BARBECUE of ALL combustible materials, gasoline and other flammable vapors and liquids.

2. Insure that the free flow of combustion and ventilating air is not obstructed.

3. Stainless Steel burners should be wire brushed every 3 months.

Cleaning:

The barbecue has been designed and manufactured from Stainless Steel for long life. If cleaning is necessary, please use a soft damp cloth and some household detergent.

Lid:

There are many different stainless steel cleaners available. Always use the mildest cleaning procedure first, scrubbing in the direction of the grain. To touch-up noticeable scratches, sand very lightly with 400 grit sand paper in the direction of the grain. Specks of grease which gather on the surfaces of the grill may give the appearance of rust, these may be removed by lightly using a “Scotch-Brite” pad in conjunction with a good stainless cleaner. ***Remember to rub in the direction of the grain.***

Maintaining Your Grills' Appearance:

One of the best features of your new stainless steel grill is it's shiny exterior. To maintain this appearance over many years, follow two simple rules;

1) Keep it covered. Backyard environments are harsh on your grills' finish. Long days of exposure to sun, water, yard chemicals and the elements will reduce the shine of stainless steel. We strongly recommend that you cover your Barbecue with a custom "Turbo" Cover from Barbeques Galore.

2) *Do not overheat your grill.* If you do not follow the operating instructions and leave the grill on high with the lid closed or allow an unattended grease fire to burn, your grills' finish will turn a dull brown. This happens to all stainless steel when it reaches a temperature of 575°F or greater. Refer to section on *"..Heat Control"* on **page 8**. If this should happen, don't panic because with some effort your grill can still be polished back to a nice shine.

Cooking Grills:

The Stainless Cooking Grills should be cleaned regularly. Use a brass bristle brush to lightly clean off the excess build-up on both sides of the grill.
Use care not to scratch or chip the porcelain finish on Porcelain Grills. **Do not use abrasives!**

To Thoroughly Clean The Grills:

Step 1. Lightly brush off excess build-up with brass brush on both sides.

Step 2. Remove grills from barbecue.

Step 3. Wash grills in warm water.

Step 4. With grills still wet, sprinkle baking soda very liberally over surfaces on both sides.

Step 5. Take a wet sponge and vigorously rub and clean off surfaces.

NOTE: Tough spots may need second application of baking soda and rubbing.

Step 6: Rinse well and dry. Oil lightly.

Stainless Steel Burners:

Burners need to be cleaned periodically. Take each individual burner out of the barbecue and brush it down very thoroughly using a stiff wire brush. Make sure every port hole is open. If the holes are obstructed, they may be cleaned using a #32 drill bit (.1160 diameter) or small open paper clip. Use a fine tooth hacksaw blade or sharp knife to clean out cross over slot on bottom of burner.

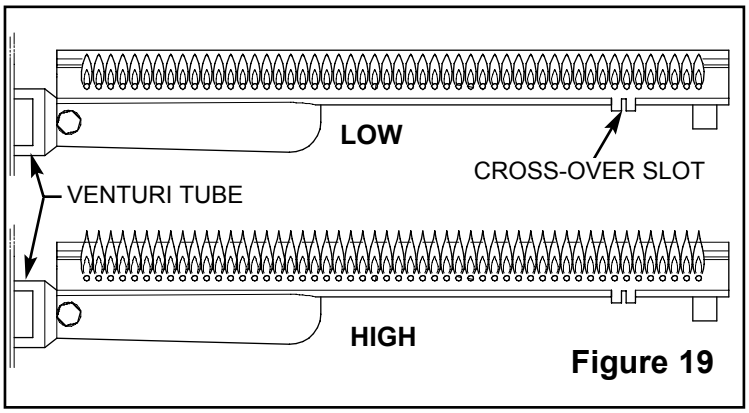

Figure 19

Visually check the inside of the Burner by using a flashlight to verify there are no internal blockages or spider webs. Use a Venturi Cleaning Brush if necessary. A Venturi Tube Cleaner should be used to clean the venturi section.

Tap the open end of burner gently on a hard surface to dislodge any residue, etc. inside.

To visually check that the burner is operating, look at the burner flame between the tray and BARBECUE frame. The flame should be approximately 1/2"-3/4" long with the high setting (see **Figure 19**).

TIP: *Rotate the burners every few months.*

⚠ CAUTION: BEWARE OF FLASHBACK

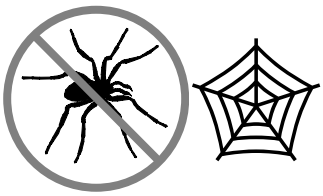

CAUTION: Spiders and small insects occasionally spin webs or make nests in the grill burner tubes during transit and warehousing. These webs can lead to a gas flow obstruction which could result in a fire in and around the burner tubes. This type of fire is known as a "FLASHBACK" and can cause serious damage to your grill and create an unsafe operating condition for the user.

Although an obstructed burner tube is not the only cause of "FLASHBACK", it is the most common cause. To reduce the chance of "FLASHBACK", you must clean the burner tubes before assembling your grill, and at least once a month in late summer or early fall when spiders are most active. Also perform this burner tube cleaning procedure if your grill has not been used for an extended period of time. A venturi tube cleaner should be used to clean the venturi section (**Figure 19**).

Information Regarding Replacement Parts:

Replacement parts for this barbecue unit are available from your Barbeques Galore retailer.

For a location nearest you please call 1-800-752-3085

Email us at customersevice@bbqgalore.com.

DOiS & DONiTS

DO..

- ✔ Have propane cylinder (LP units) filled by authorized LP supplier.
- ✔ Record your grill model number on your instructions and keep the instructions and parts list in a convenient place.
- ✔ Check all gas line connections for leaks with soapy solution prior to lighting, tighten until bubbles disappear.
- ✔ Raise the hood before lighting the burner.
- ✔ Preheat the grill 5 minutes maximum before cooking.
- ✔ After cooking, turn the grill off, then take a long handled soft brass bristle brush and brush off the cooking grills. Then turn off gas at the Propane tank or main valve.
- ✔ Use a mitt to turn off tank valve, it can get hot.
- ✔ Cook with hood down when possible. It is generally faster and more efficient. Trapped smoke adds to the flavor.
- ✔ Turn the gas off promptly should you be unable to light the grill immediately. Wait a full 5 minutes before attempting to light grill again.
- ✔ Have proper tools, tongs, mittens and hot pads ready prior to removing foods.
- ✔ Trim excess fats from meats to minimize flare-ups.
- ✔ Let the grill cool before removing any parts for cleaning.
- ✔ Be careful of the control valve setting. LP gas is hotter and the lower setting may be generally preferred.
- ✔ Cover the barbecue when not in use.
- ✔ Use a mitt or glove when opening BBQ lid or turning off Propane tank valve after use.

DON'T..

- ✘ Install grill closer than 14" on the sides or 16" on the back to any combustible construction.
- ✘ Attempt any adjustment of the regulator, it has been preset and tested.
- ✘ Allow the LP tank to lie on its side. Keep in an upright position.
- ✘ Turn a control knob on until a lighted match is inserted in the lighting hole.
- ✘ Use plastics or untempered glass utensils on the grill.
- ✘ Attempt to move an aluminum foil pan while it is hot. Let it cool first before moving it.
- ✘ Cover or block any air openings in the bottom of the grill with foil.
- ✘ Wear long, loose flowing clothing around the grill. Long flowing hair is also easily ignited especially by unexpected flare-ups. Tie hair back or wear a hat or a scarf.
- ✘ Put food on the grill and leave it unattended or unwatched for long periods. Most fats can catch fire even on the lower setting.
- ✘ Clean Flame Tamers in any solution other than a boiling detergent water. Then rinse well, dry and reuse.
- ✘ Use caustic materials, i.e., lye , to clean grill parts.
- ✘ Store any additional Propane gas tanks under barbecue.

⚠ When cooking with lid closed NEVER exceed temperatures of 480°F (250°C).

WOOD CHIPS IN A GAS GRILL

Wood chips should be soaked for a minimum of 30 minutes. Presoaked chips or chunks must be in a container or wrapped in foil, log fashion, for use in gas grills.

If smoking is expected to last for a long period of time, you should keep chips soaking in the event you need to throw more on the fire or to add to the container or make another foil log.

Deluxe Stainless Steel Turbo Overall Dimensions & Specs

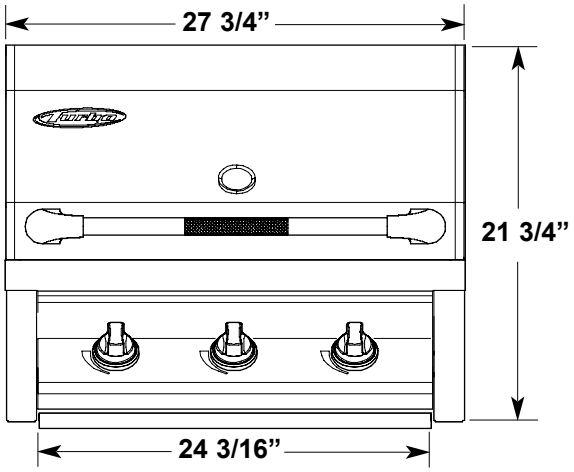

Figure 20 3 Burner Standard

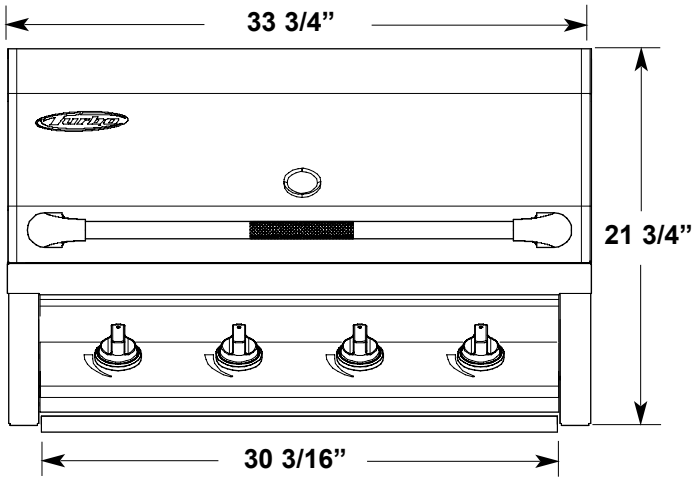

Figure 21 4 Burner Standard

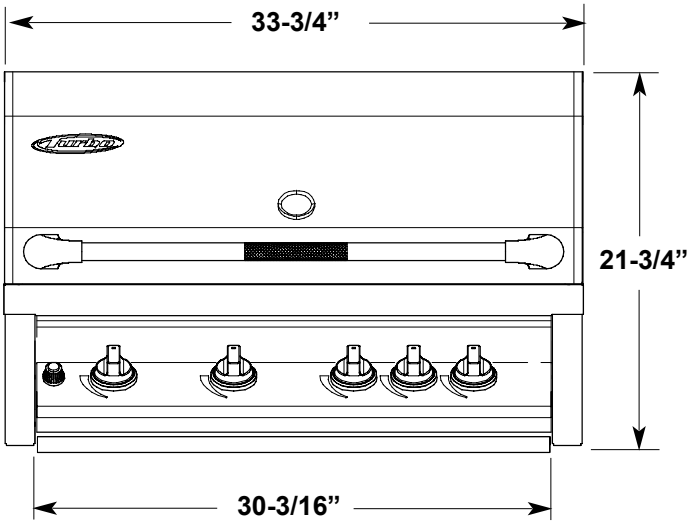

Figure 22 4 Burner Rotis

Figure 23

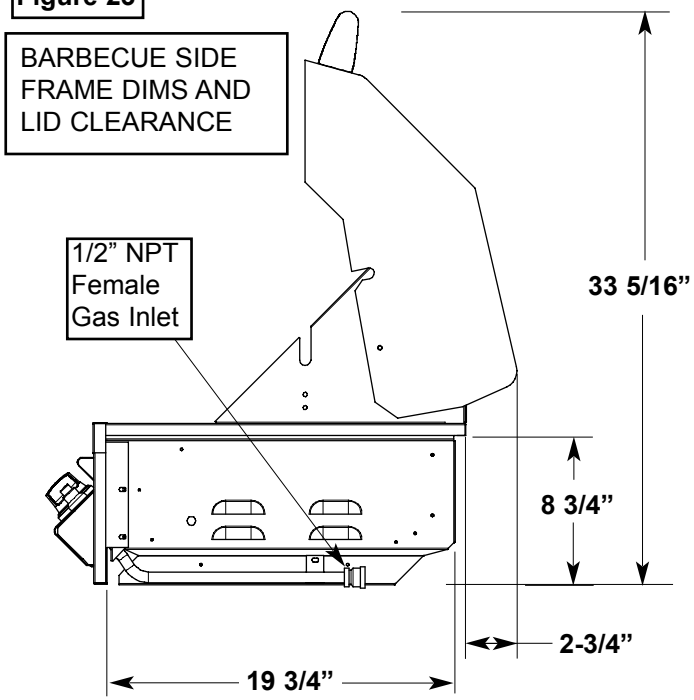

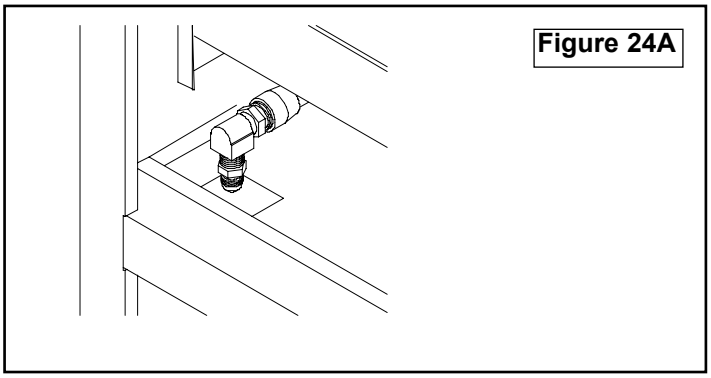

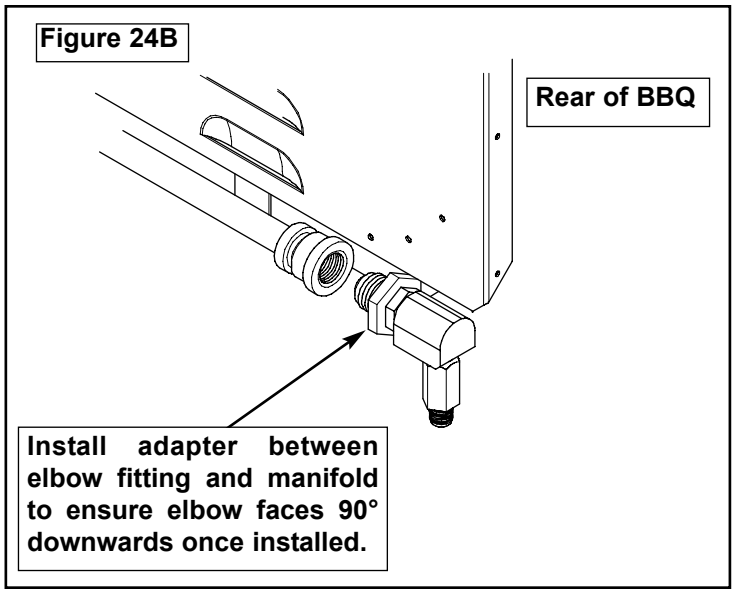

Propane Installation

NOTE: When choosing a location for your Gas grill, keep in mind that it should not be located under any overhead combustible construction. The side of the grill should not be any closer than 14 inches to combustible construction, and the back of the grill should not be any closer than 16 inches to combustible construction.

QCC-1 (Quick Connect Coupling) & OPD (Overfill Protection Device) required (not included).

⚠WARNING

Vapors from products containing Chlorine and other caustic chemicals can cause Stainless Steel flexible connectors to corrode. THESE PRODUCTS SHOULD NOT BE STORED IN AN ISLAND OR NEAR THE connector. Cleaning solutions, Household Chemicals and Solder fluxes can also cause pinholes if they come in contact with these connectors and **MUST** be washed off immediately with water.

CSA Approved Propane Regulator (not supplied)

Secure Stainless Flexline with Plumber's Tape to prevent shifting during tank installation. An approved rubber gas hose is then connected to the LPG tank.

Figure 26

UNIT SETS IN AND RESTS ON LIP. 3 SIDES

NON-COMBUSTIBLE CONSTRUCTION

9" MIN.

20"

DIM "A"

DIM. "A"	MODEL
24 1/2"	3 BURNER
30 1/2"	4 BURNER

BARBECUES MUST BE INSTALLED IN ACCORDANCE WITH AGA SPECIFICATION AND ALL LOCAL BUILDING CODES

Outdoor Natural Gas Barbecue Built-in Installation Specifications

NOTE : Upper & lower ground-level vents (20 sq. in. minimum each) **MUST BE PROVIDED** for combustion air on both sides of built-in construction. Please ask a Barbeques Galore associate for full details.

Figure 27

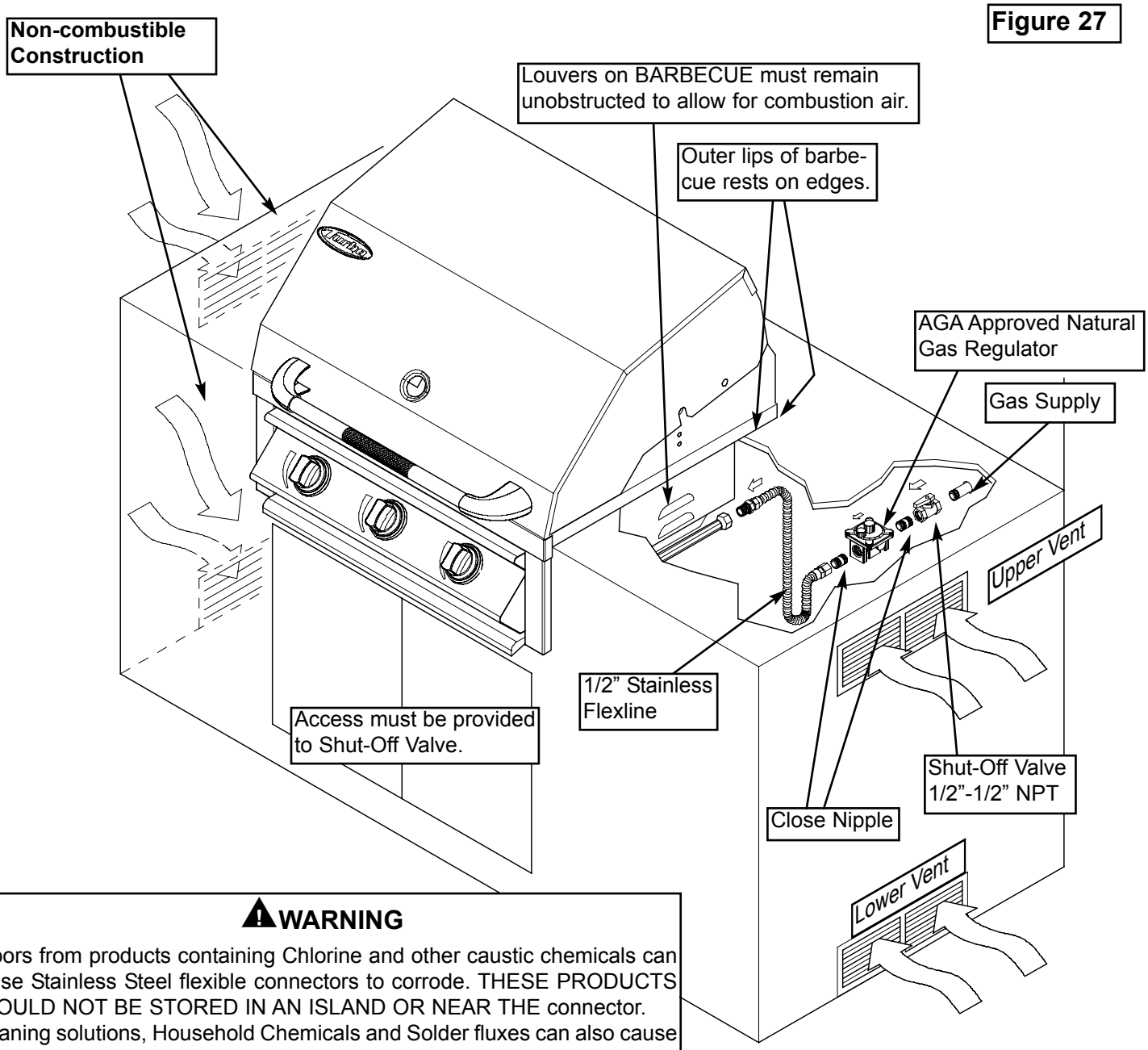

⚠WARNING

Vapors from products containing Chlorine and other caustic chemicals can cause Stainless Steel flexible connectors to corrode. THESE PRODUCTS SHOULD NOT BE STORED IN AN ISLAND OR NEAR THE connector. Cleaning solutions, Household Chemicals and Solder fluxes can also cause pinholes if they come in contact with these connectors and **MUST** be washed off immediately with water.

NOTE: When choosing a location for your Gas grill, keep in mind that it should not be located under any overhead combustible construction. The side and bottom of the grill should not be any closer than 14 inches to combustible construction, and the back of the grill should not be any closer than 16 inches to combustible construction.

Barbecues must be installed in accordance with AGA specifications and all local building codes.

Deluxe Stainless Turbo Parts List

TURBO STS BARBECUE		C3BSSTP/N		C4BSSTP/N		C4BSSTRP/N	
ITEM	**DESCRIPTION**	**SKU#**	**QTY**	**SKU#**	**QTY**	**SKU#**	**QTY**
1	Lid	313783	1	315465	1	315465	1
2	Lid Handle	313791	1	315473	1	315473	1
3	Temp Gauge	313270	1	313270	1	313270	1
4	Warming Rack	313809	1	315481	1	315481	1
5	Lid Support Assembly	313841	1	315499	1	315507	1
6	Barbecue Chassis	313858	1	315515	1	315515	1
7	Manifold	313866	1	315523	1	315531	1
8	Flame Thrower Valve 45^0	315333	3	315333	4	315333	4
9	Rotisserie Burner Control Valve					315358	1
10	Drip Tray	315341	1	315549	1	315549	1
11	Chrome Knob	313874	3	313874	4	313874	5
12	Cooking Grate 8"			210153	4	210153	4
13	Cooking Grate 13"	210161	2				
14	Stainless Burners(3 Pak)	259895	1				
14	Stainless Burners(2 Pak)			259887	2	259887	2
15	Briquette Tray Assembly	244475	3	244475	4	244475	4
16	Battery Holder-Rear Igniter					315556	1
17	Rear Rotisserie Burner					315564	1
18	Rotis Burner Cover					315572	1
19	Safety Device Thermocouple					315580	1
20	Safety Device Cover					315598	1
21	Electrode Assembly					315606	1
22	Bezels	315366	3	315366	4	315366	5
23	Control Panel	315374	1	315614	1	315622	1
24	Rear Burner Gas Line					315630	1
25	Baffle	315382	1	315648	1	315648	1
26	Side Trim Piece Set (1 RH & 1 LH)	315390	1	315390	1	315390	1
27	Handle Bracket Set (1 RH & 1 LH)	315408	1	315408	1	315408	1
28	Front Trim Piece	315416	1	315655	1	315655	1
29	Rear Trim Piece	315440	1	315663	1	315663	1
30	Elbow Fitting	315457	1	315457	1	315457	1
-	Rear Baffle,Rear Burner					315671	1
	Orifice for Main Burner--NG	315697	3	315697	4	315697	4
	Orifice for Main Burner--LP	299503	3	299503	4	299503	4
	Orifice for Rear Burner--NG					315705	1
	Orifice for Rear Burner--LP					288167	1

Deluxe Stainless Steel Turbo

Figure 28

3 Burner Standard C3BSSTP/N

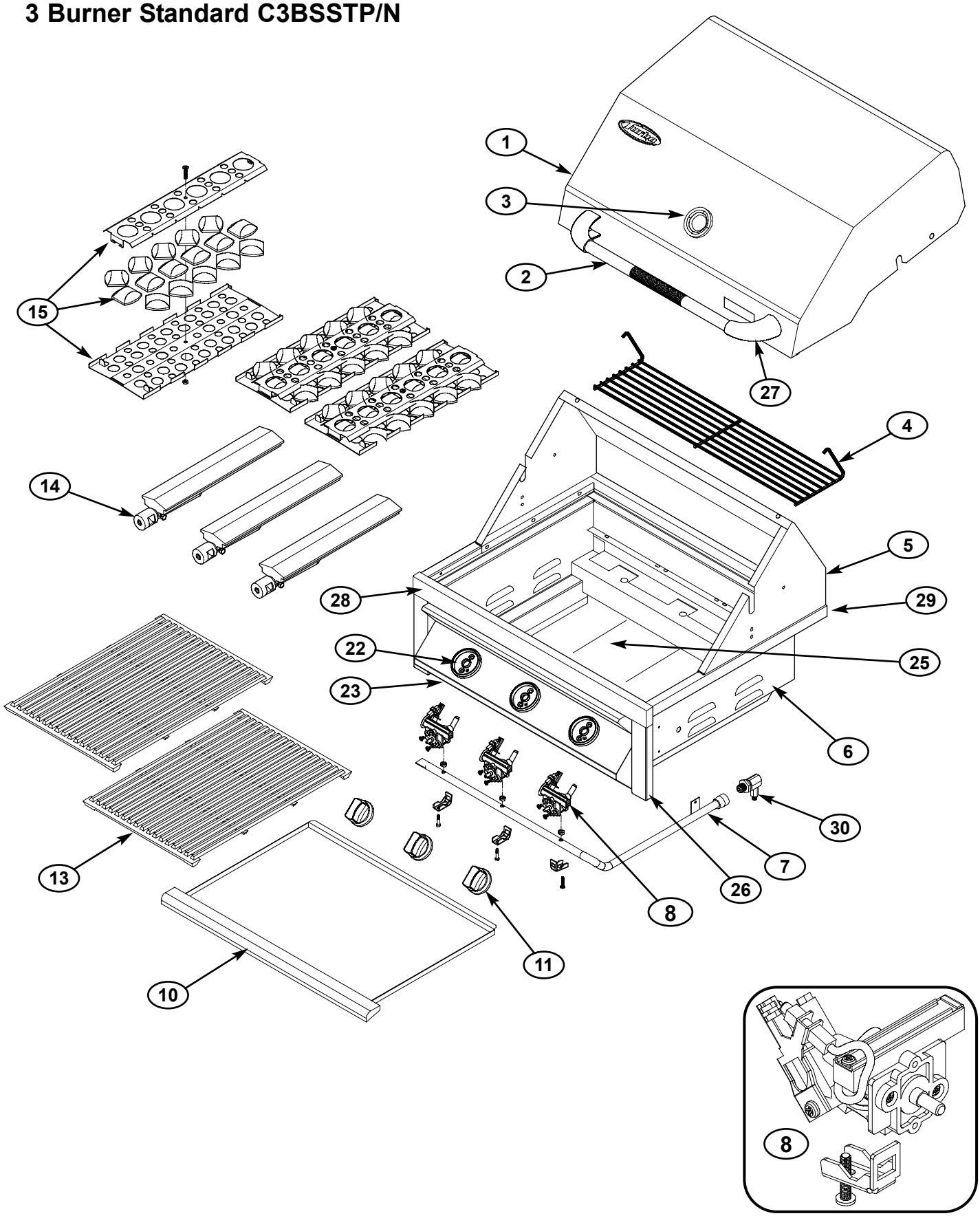

Deluxe Stainless Steel Turbo

Figure 29

4 Burner Standard C4BSSTP/N (not shown)
4 Burner Rotis C4BSSTRP/N (shown)

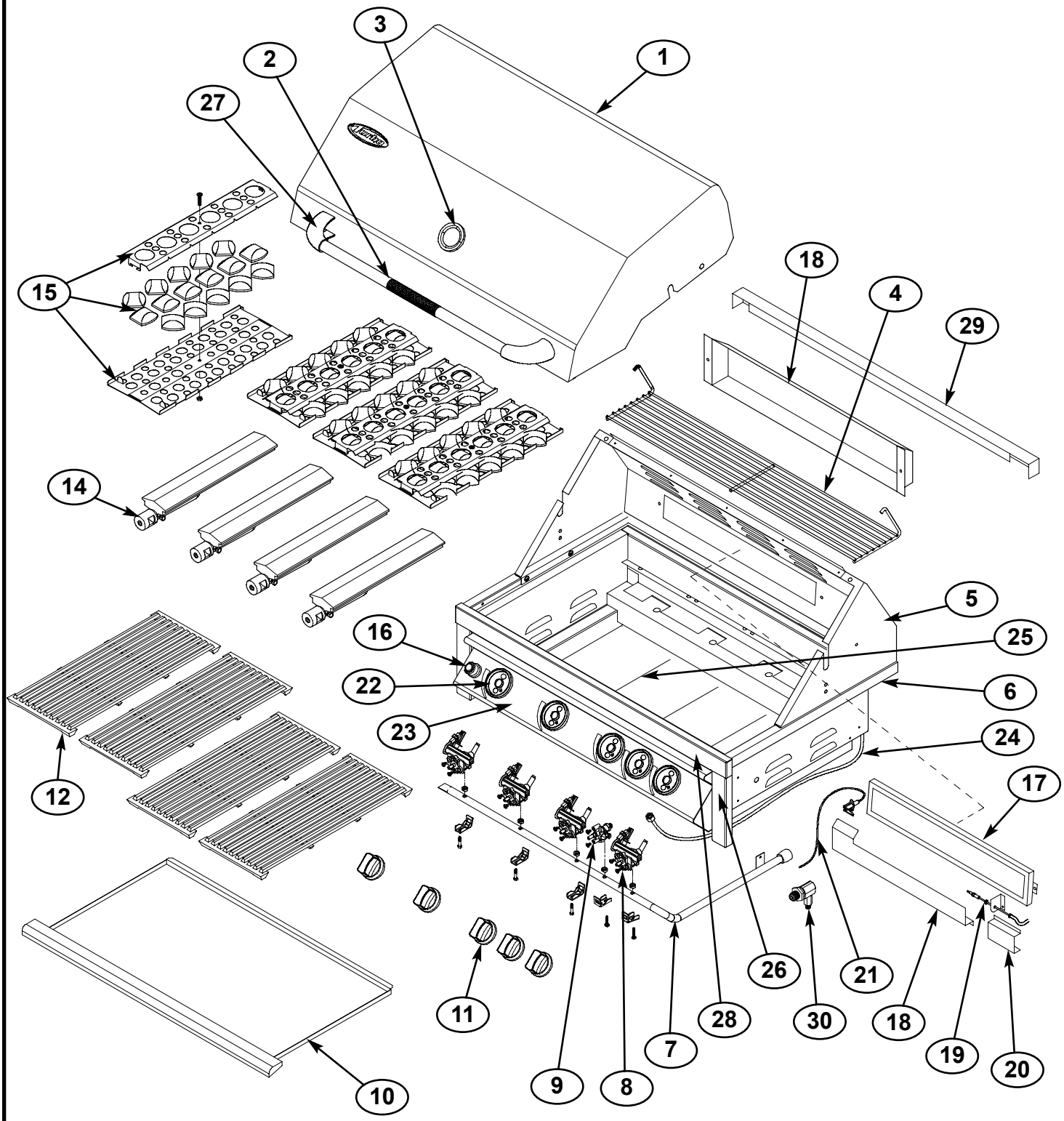

	TURBO STS CART	C3BSSTC		C4BSSTC	
ITEM	**DESCRIPTION**	**SKU#**	**QTY**	**SKU#**	**QTY**
1	Left Side Panel	315739	1	315739	1
2	Right Side Panel	315754	1	315754	1
3	Bottom Panel	315762	1	315770	1
4	Front Trim Piece	315788	1	315796	1
5	Rear Trim Piece	315804	1	315812	1
6	Heat Shield	315820	1	315838	1
7	RH Side Shelf Assembly	315846	1	315846	1
8	LH Side Shelf Assembly	315853	1	315853	1
9	Side Shelf Bracket Left	315861	2	315861	2
10	Side Shelf Bracket Right	315879	2	315879	2
11	Cart Hardware Pack	315887	1	315887	1
12	RH Door	315895	1	315903	1
13	LH Door	315911	1	315929	1
14	Slider Set(LH&RH)	315937	1	315937	1
15	Tank Slider Set Assembly	315945	1	315945	1
16	Back Panel	315952	1	315960	1
17	Fixed Castors(LHS)	315978	2	315978	2
18	Swivel Castors(RHS)	315986	2	315986	2
19	Towel Bars	315994	2	316000	2
20	Door Handles	316018	2	316018	2
21	LP Hose & Regulator	144655	1	144655	1
22	Magnet Catch	316026	2	316026	2
23	Towel Rack	316034	1	316034	1

Deluxe Stainless Steel Turbo Carts

Figure 30
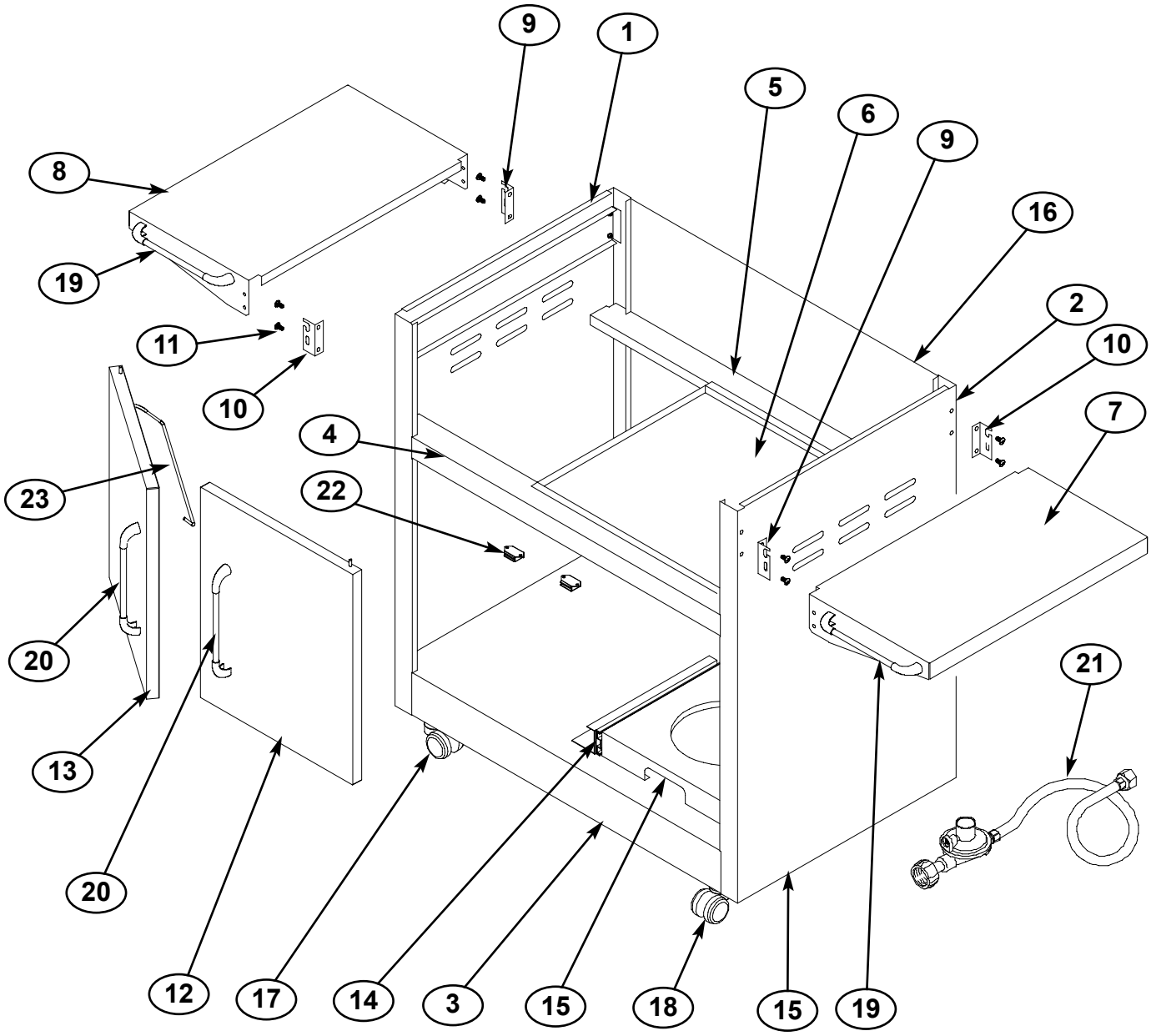
3 Burner Cart sku# C3BSSTC
4 Burner Cart sku# C4BSSTC